BROAN®

# PM390HS SERIES

# POWER MODULE

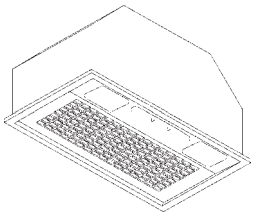

## READ AND SAVE THESE INSTRUCTIONS

**⚠ INTENDED FOR DOMESTIC COOKING ONLY ⚠**

### ⚠ WARNING

***TO REDUCE THE RISK OF FIRE, ELECTRIC SHOCK, OR INJURY TO PERSONS, OBSERVE THE FOLLOWING:***

1. Use this unit only in the manner intended by the manufacturer. If you have questions, contact the manufacturer at the address or telephone number listed in the warranty.
2. Before servicing or cleaning unit, switch power off at service panel and lock service panel to prevent power from being switched on accidentally. When the service disconnecting means cannot be locked, securely fasten a prominent warning device, such as a tag, to the service panel.
3. Installation work and electrical wiring must be done by a qualified person(s) in accordance with all applicable codes and standards, including fire-rated construction codes and standards.
4. Sufficient air is needed for proper combustion and exhausting of gases through the flue (chimney) of fuel burning equipment to prevent backdrafting. Follow the heating equipment manufacturer's guidelines and safety standards such as those published by the National Fire Protection Association (NFPA), and the American Society for Heating, Refrigeration and Air Conditioning Engineers (ASHRAE), and the local code authorities.
5. When cutting or drilling into wall or ceiling, do not damage electrical wiring and other hidden utilities.
6. Ducted fans must always be vented to the outdoors.
7. Do not use this unit with any separate solid-state speed control device.
8. To reduce the risk of fire, use only metal ductwork.
9. This unit must be grounded.

TO REDUCE THE RISK OF A RANGE TOP GREASE FIRE:

A. Never leave surface units unattended at high settings. Boilovers cause smoking and greasy spillovers that may ignite. Heat oils slowly on low or medium settings.
B. Always turn hood ON when cooking at high heat or when flambeing food (i.e. Crepes Suzette, Cherries Jubilee, Peppercorn Beef Flambe').
C. Clean ventilating fans frequently. Grease should not be allowed to accumulate on fan or filter.
D. Use proper pan size. Always use cookware appropriate for the size of the surface element.

### ⚠ WARNING

TO REDUCE THE RISK OF INJURY TO PERSONS IN THE EVENT OF A RANGE TOP GREASE FIRE, OBSERVE THE FOLLOWING:*

1. SMOTHER FLAMES with a close-fitting lid, cookie sheet, or metal tray, then turn off the burner. BE CAREFUL TO PREVENT BURNS. If the flames do not go out immediately, EVACUATE AND CALL THE FIRE DEPARTMENT.
2. NEVER PICK UP A FLAMING PAN - You may be burned.
3. DO NOT USE WATER, including wet dishcloths or towels - violent steam explosion will result.
4. Use an extinguisher ONLY if:
   A. You know you have a Class ABC extinguisher and you already know how to operate it.
   B. The fire is small and contained in the area where it started.
   C. The fire department is being called.
   D. You can fight the fire with your back to an exit.

   * Based on "Kitchen Fire Safety Tips" published by NFPA.

### ⚠ CAUTION

1. To reduce risk of fire and to properly exhaust air, be sure to duct air outside. Do not vent exhaust air into spaces within walls or ceilings or into attics, crawl spaces, or garages.
2. Take care when using cleaning agents or detergents.
3. Avoid using food products that produce flames under the Range Hood.
4. For general ventilating use only. Do not use to exhaust hazardous or explosive materials and vapors.
5. To avoid motor bearing damage and noisy and/or unbalanced impellers, keep drywall spray, construction dust, etc. off power unit.
6. Your hood motor has a thermal overload which will automatically shut off the motor if it becomes overheated. The motor will restart when it cools down. If the motor continues to shut off and restart, have the hood serviced.
7. For best capture of cooking impurities, the bottom of the hood should be a minimum of 24" and a maximum of 30" above the cooking surface.
8. Two installers are recommended.
9. This product is equipped with a thermostat which may start blower automatically. To reduce the risk of injury and to prevent power from being switched on accidentally, switch power off at service panel and lock or tag service panel.
10. Please read specification label on product for further information and requirements.

an EefaCo. Store
1-877-275-9111

## INSTALL THE DUCTWORK

**NOTE: To reduce the risk of fire, use only metal ductwork.**

1. Decide where the ductwork will run between the hood and the outside.
2. A straight, short duct run will allow the hood to perform most efficiently.
3. Long duct runs, elbows, and transitions will reduce the performance of the hood. Use as few of them as possible. Larger ducting may be required for best performance with longer duct runs.
4. Install a roof or wall cap. Connect round metal ductwork to cap and work back towards hood location. Use duct tape to seal the joints between ductwork sections.

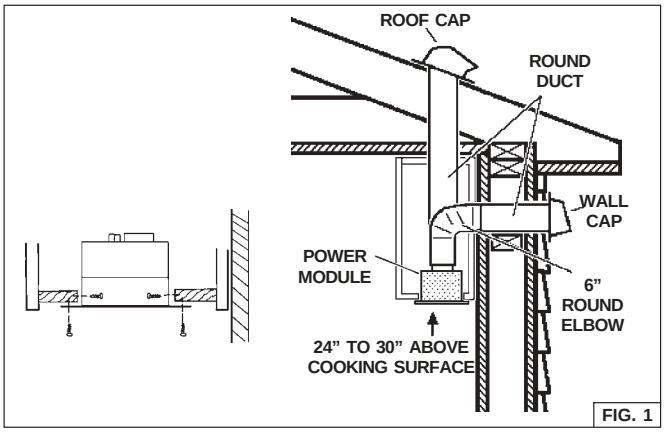

FIG. 1

## INSTALL THE HOOD

NOTE: the hood has to be installed, inside the cabinet, at minimum 1" from the rear wall cabinet and at 3" from the front wall cabinet.

The internal height of cabinet has to be minimum 16".

The hood should be mounted centered over the cook top burners.

1. Remove the grid by moving the 2 slide fasteners "A" forward (Fig.2).
2. Cut a hole in the bottom of the cabinet, using the dimensions shown (Fig. 3).
3. Adjust the position of the clasping side spring by means of the proper "B" screw according to the thickness of the bored panel to which it is going to be anchored (Fig. 4).
4. NOTE: For installations where the Power Pack is less than 30" above cook top, it is recommended that the Power Pack be mounted into a metal liner or non-combustible material. This will allow easier cleaning and provide protection to the cabinetry.
5. Insert the hood in the cabinet and lock it by means of the side spring.
6. Insert the hood in the cabinet and secure with the (4) "C" mounting screws 3.2x13mm (Fig. 5). For alternative side fixing use M4x15mm screws with washers and nuts.
7. In the Non-Ducted Recirculation Configuration, install the Non-ducted recirculation Filter before replacing the grid (see section "Non-ducted recirculation filter installation").
8. Replace the grid.

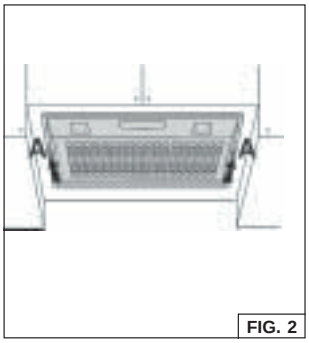

FIG. 2

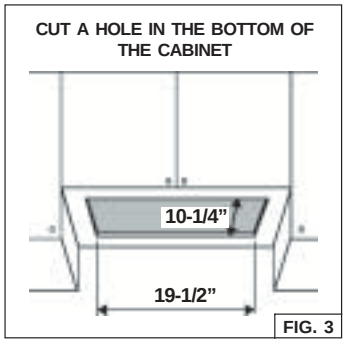

FIG. 3

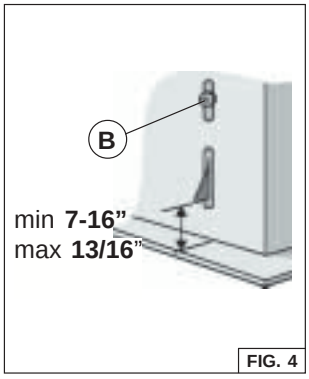

FIG. 4

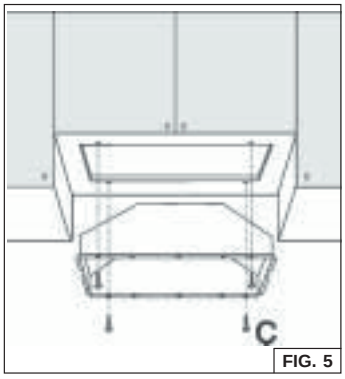

FIG. 5

## CONNECT DUCTWORK

***Ducted Configuration***

1. Take the **damper** and assemble it onto the hood's discharge opening, pressing slightly.
2. Use **6" round metal duct** to connect the discharge collar on the hood to the ductwork above.
3. Use **duct tape** to make all joints secure and air tight.

***Non-Ducted Recirculation Configuration***

1. Connect a **6" round metal duct** to the discharge opening so that the air is sent outside the cabinet and sent back into the room.
2. Use **duct tape** to make all joints secure and air tight.

## NON-DUCTED RECIRCULATION FILTER INSTALLATION

1. Remove the metal wires (Fig. 9) and discard them.
2. Install the Non-ducted recirculation filter over the grease filter and secure it with the metal wires supplied with the Non-ducted recirculation Filter (Fig. 6).

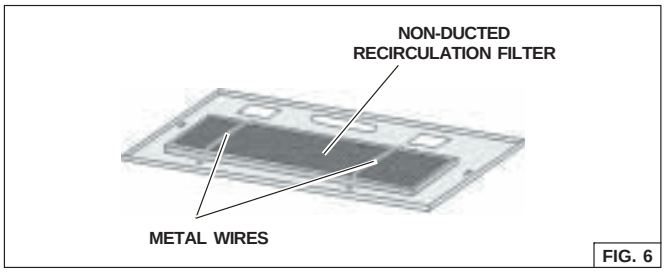

FIG. 6

an EefaCo. Store
1-877-275-9111

## WIRING

**Note: This range hood must be properly grounded.**

**The unit should be installed by a qualified electrician in accordance with all applicable national and local electrical codes.**

GROUNDING INSTRUCTIONS

This appliance must be grounded. In the event of an electrical short circuit, grounding reduces the risk of electric shock by providing an escape wire for the electric current. This appliance is equipped with a cord having a grounding wire with a grounding plug. The plug must be plugged into an outlet that is properly installed and grounded.

WARNING - Improper grounding can result in a risk of electric shock. Consult a qualified electrician if the grounding instructions are not completely understood, or if doubt exists as to whether the appliance is properly grounded.

Do not use an extension cord. If the power supply cord is too short, have a qualified electrician install an outlet near the appliance.

Position the electrical outlet at a maximum distance of 33-7/16" (85 cm) from where the lead exits from the hood (see illustration alongside).

Fit the plug into the outlet.

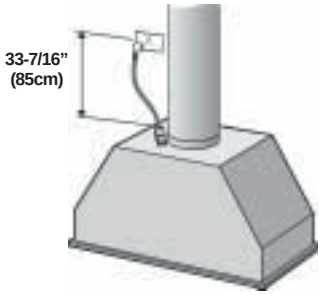


FIG. 7

## OPERATION

### *Controls*

The **light switch** turns the lamps on and off.

The **blower switch**: makes it possible to select the motor operating speed. Position 0: motor off.

The **pilot lamp** lights up whenever the blower is on.

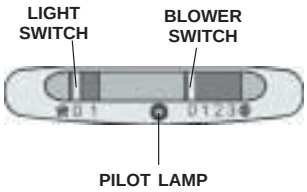


FIG. 8

### *HEAT SENTRY™*

Your hood is equipped with a HEAT SENTRY™ thermostat.

This thermostat is a device that will turn on or speed up the blower if it senses excessive heat above the cooking surface.

1) If blower is OFF - it turns blower ON to HIGH speed.

2) If blower is ON at a lower speed setting - it turns blower up to HIGH speed.

When the temperature level drops to normal, the blower will return to its original setting.

**WARNING**

**The HEAT SENTRY thermostat can start the blower even if the hood is turned OFF. When this occurs, it is impossible to turn the blower OFF with its switch. If you must stop the blower, do it from the main electrical panel.**

## MAINTENANCE

**ALWAYS SWITCH OFF THE ELECTRICITY SUPPLY BEFORE CARRYING OUT ANY OPERATIONS ON THE APPLIANCE.**

### *Grease Filter*

The **grease filter** should be cleaned frequently. Use a warm detergent solution. Grease filter is dishwasher safe.

To remove the grease filter: remove the grid by moving the 2 slide fasteners "A" (Fig. 2); remove the metal wires and then the grease filter (Fig. 9).

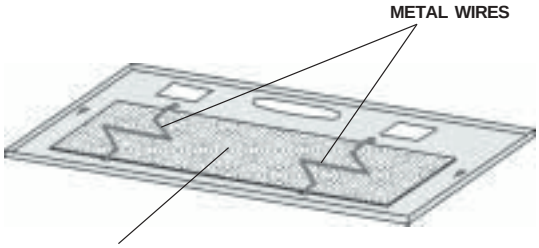


FIG. 9

### *Non-Ducted Recirculation Filter*

The Non-Ducted Recirculation filter should be changed every 6 months.

To remove the Non-Ducted Recirculation filter:

1. Remove the grid by moving the 2 side fasteners "A" (Fig. 2).
2. Remove the metal wires (Fig. 6) and replace the Non-ducted recirculation Filter.

### *Cleaning*

Occasional care will help preserve its fine appearance.

- Clean with warm water and mild detergent only.
- Follow all cleaning by rinsing with clear water.
- Wipe dry with clean, soft cloth.

### *Light bulbs*

This range hood requires two 40-Watt light bulbs (not included).

To change bulbs:

1. Remove the grid by moving the 2 slide fasteners (A).
2. Replace with light bulbs of the same type (MAX 40W, 120V, E12, Type B or Type T8 Bulb). CAUTION: BULB MAY BE HOT!

an EefaCo. Store
1-877-275-9111

## SERVICE PARTS

| KEY NO. | PART NO. | DESCRIPTION |
|---|---|---|
| 4 | B03295038 | Side Fastener |
| 5 | B03127682 | Grid |
| 6 | B02011013 | Spring |
| 9 | B08087922 | Grease Filter |
| 14 | B02300233 | Condenser |
| 27 | B02011155 | Metal Wires |
| 28 | B02300280 | Lampholder |
| 29 | B03293051 | Light Fitting |
| 37 | B02300787 | Heat Sentry |
| 45 | BW0000043 | Blower |
| 48 | B02310203 | Motor |
| 49 | B03295000 | Blower Wheel |
| 60 | B02300249 | Feeder Cable |
| 86 | B08088378 | Damper |
| 134 | B03295039 | Grid Stop |
| 145 | B032920170 | Wiring Box |
| 146 | B032920180 | Wiring Box Cover |
| 147 | BR2300132 | Terminal Block |
| 151 | B032920200 | Wire Clamp |
| 152 | B03292200 | Wire Clamp |
| 165 | B03294780 | Controls Box |
| 165 | B03295008 | Box Condenser |
| 166 | B08086668 | Heat Sentry Board |
| 196 | BE3348672 | Reflector |
| 202 | B03294779 | Runner Wires |
| 222 | B03295040 | Control Box Cover |
| 223 | B03295042 | Blower Switch |
| 228 | B08086285 | Controls Board |
| 229 | B03201014 | Pilot Lamp |
| 241 | B03295041 | Light Switch |
| 472 | BE3344843 | Controls Bracket |
| AQI | B06108860 | Switch box Assembly (Included Key No. 165, 228, 28, 222, 152, 241, 223, 202, 229) |
| - | - | "40 Watt Max.Candelabra Bulbs not included" |
| - | B08999040 | Non-Ducted Filter Kit (purchased separately) |

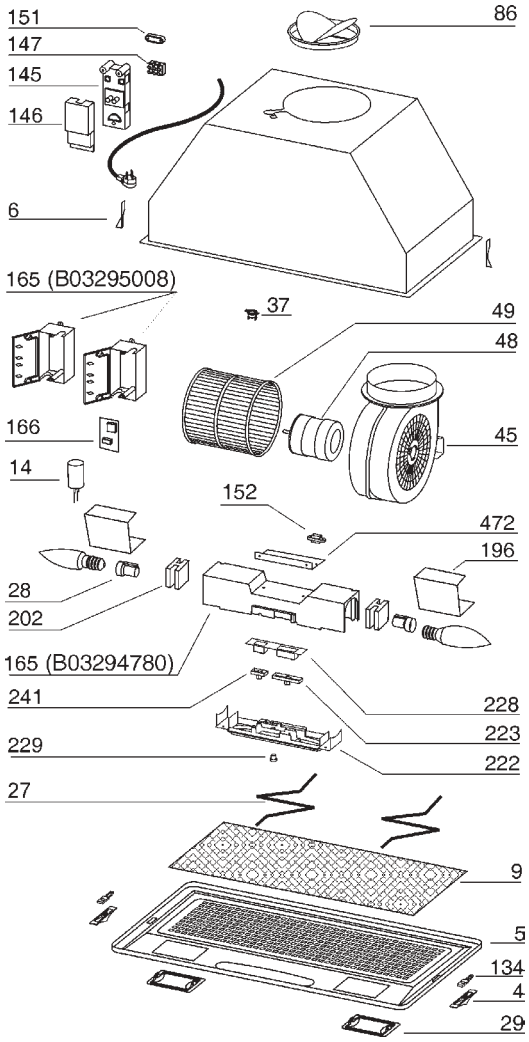


## WARRANTY

**BROAN-NUTONE LLC ONE YEAR LIMITED WARRANTY**

Broan-NuTone LLC warrants to the original consumer purchaser of its products that such products will be free from defects in materials or workmanship for a period of one year from the date of original purchase. THERE ARE NO OTHER WARRANTIES, EXPRESS OR IMPLIED, INCLUDING, BUT NOT LIMITED TO, IMPLIED WARRANTIES OR MERCHANT ABILITY OR FITNESS FOR A PARTICULAR PURPOSE.

During this one-year period, Broan-NuTone LLC will, at its option, repair or replace, without charge, any product or part which is found to be defective under normal use and service.

THIS WARRANTY DOES NOT EXTEND TO FLUORESCENT LAMP STARTERS, TUBES, HALOGEN AND INCANDESCENDT BULBS. This warranty does not cover (a) normal maintenance and service or (b) any products or parts which have been subject to misuse, negligence, accident, improper maintenance or repair (other than by Broan-NuTone LLC), faulty installation or installation contrary to recommended installation instructions.

The duration of any implied warranty is limited to the one-year period as specified for the express warranty. Some states do not allow limitation on how long an implied warranty lasts, so the above limitation may not apply to you.

BROAN-NUTONE LLC'S OBLIGATION TO REPAIR OR REPLACE, AT BROAN-NUTONE LLC'S OPTION, SHALL BE THE PURCHASER'S SOLE AND EXCLUSIVE REMEDY UNDER THIS WARRANTY. BROAN-NUTONE LLC SHALL NOT BE LIABLE FOR INCIDENTAL, CONSEQUENTIAL OR SPECIAL DAMAGES ARISING OUT OF OR IN CONNECTION WITH PRODUCT USE OR PERFORMANCE. Some states do not allow the exclusion or limitation of incidental or consequential damages, so the above limitation or exclusion may not apply to you.

This warranty gives you specific legal rights, and you may also have other rights, which vary from state to state. This warranty supersedes all prior warranties.

an EefaCo. Store
1-877-275-9111